Husqvarna

automower™

HUSQVARNA AUTOMOWER **320 & 330 X, Wheel brush kit mounting instruction, 2013-02**

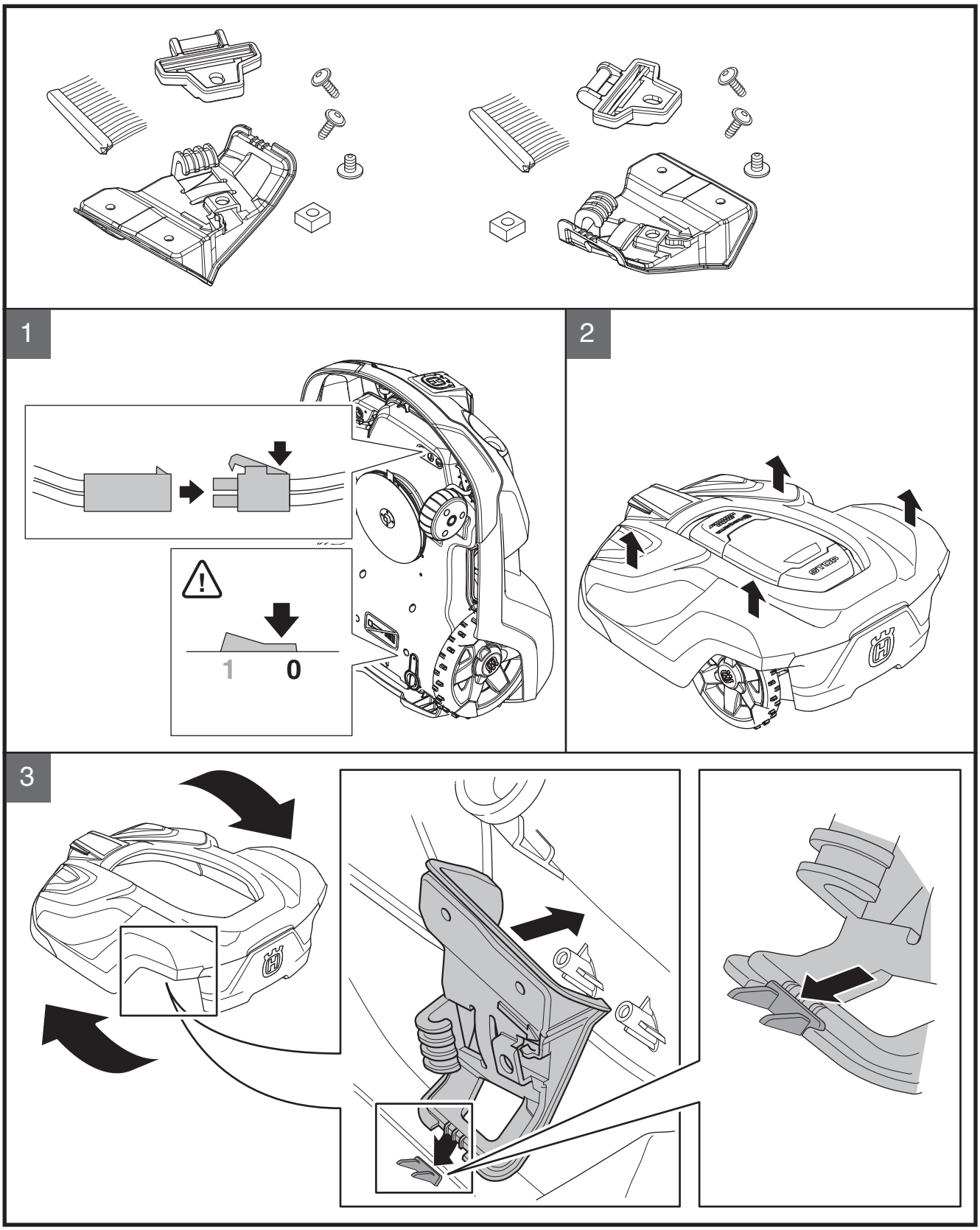

5848450-01

4

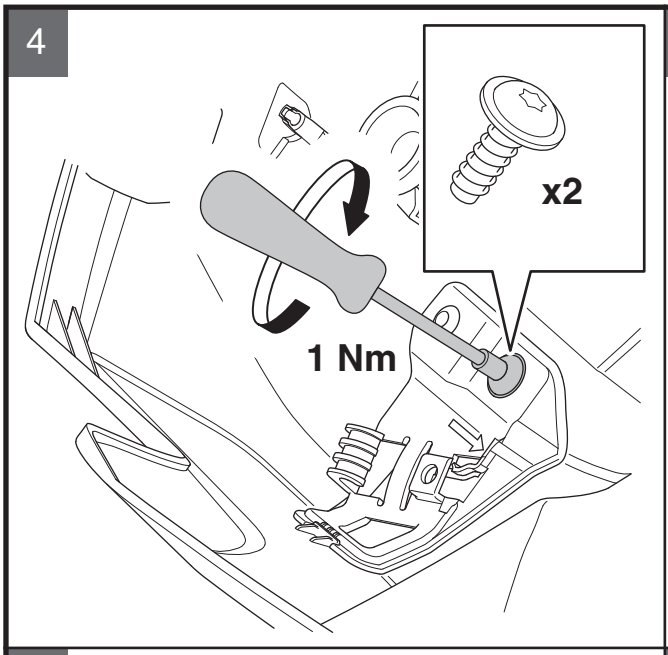

5

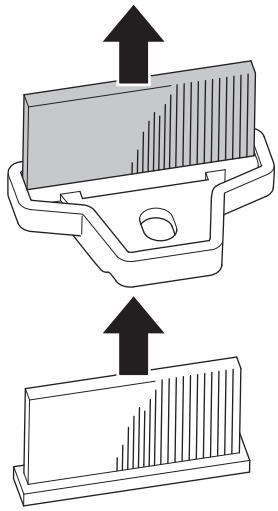

6

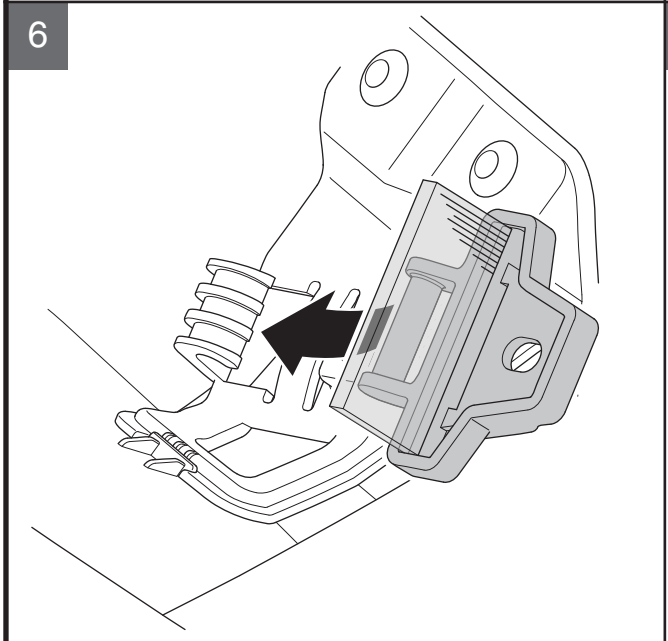

7

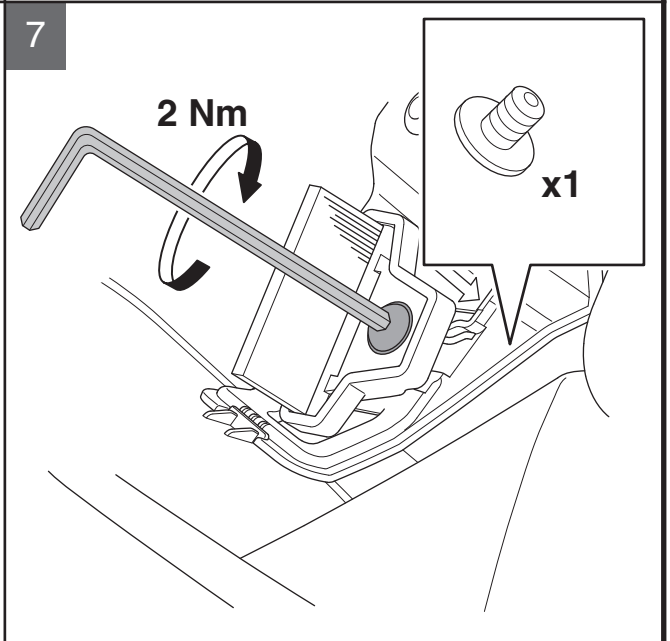

8

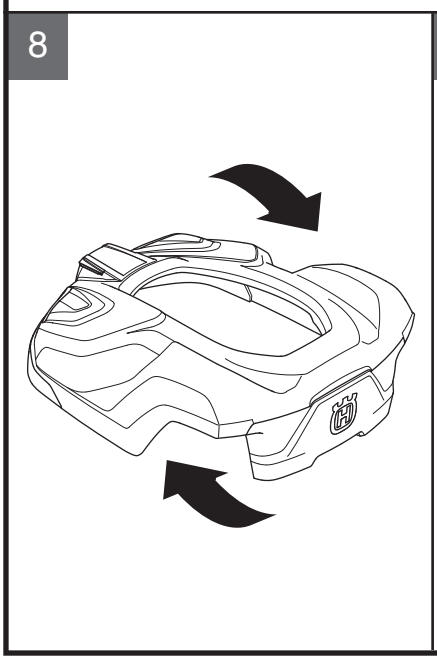

9

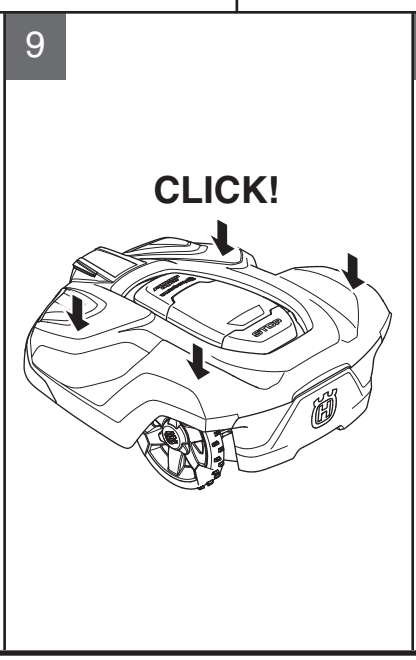
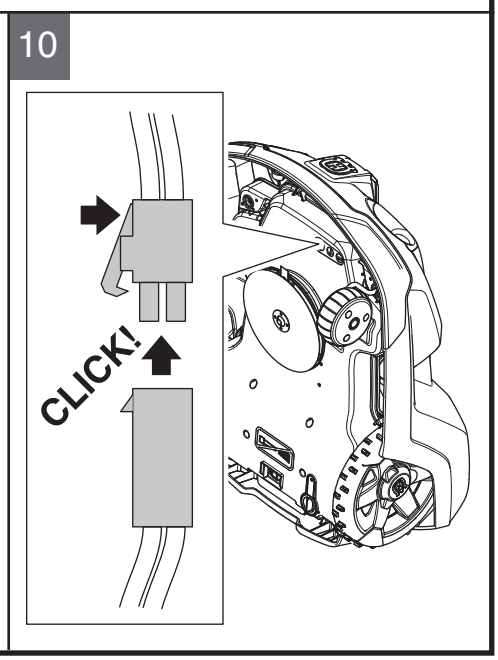
10